100KW-215KWh-HV
C&I energy storage system



Product Features

This series is a complete solution for industrial and commercial energy storage, supporting photovoltaic systems, energy storage lithium batteries, energy storage converter refrigeration systems, fire protection systems, etc. The system is safe and reliable and can be used in home energy storage, industrial and commercial energy storage systems and other fields.

- Safe, reliable and long life
- High quality guarantee
- Easy to use and deploy
- Supply chain advantages
- core technology
- product design
- Flexibility
- Highly efficient and profitable

Application scenarios

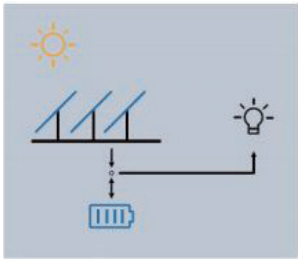

Optical storage microgrid

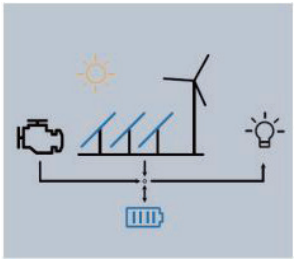

Firewood storage microgrid

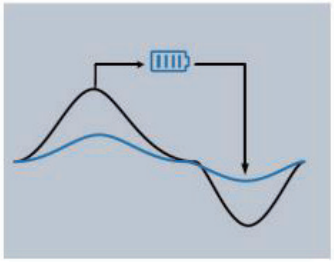

Firewood storage and weak power grid

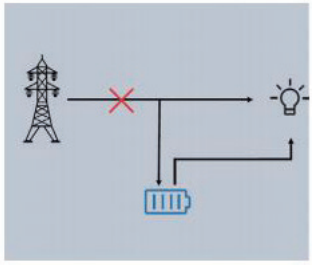

emergency power supply

System topology diagram

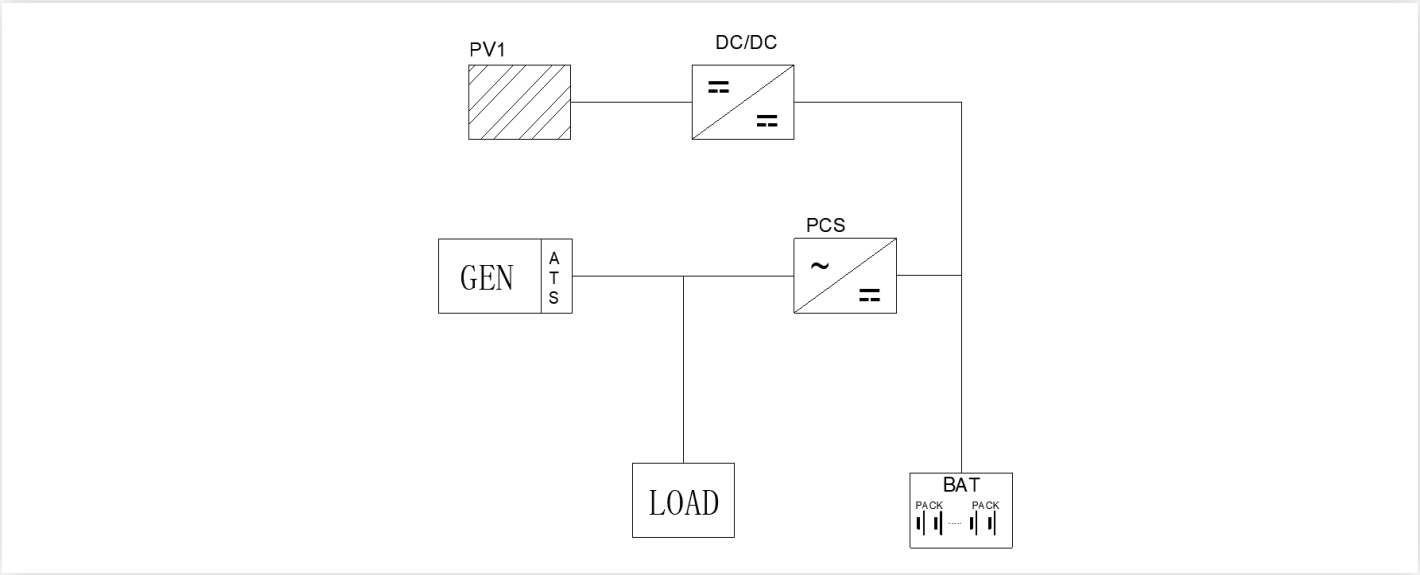

Technical parameters

Battery parameters	
Cell specifications	LFP3.2V-280Ah
Battery module configuration	20S1P-64V280Ah
System energy configuration	240S1P-768V280Ah
Rated voltage(V)	768V(600V~876V)
Rated capacity(Ah)	280Ah
Rated energy (kWh)	215KWh
PCS parameters	
Rated power(kW)	100KW
Rated current(A)	144A
Rated output voltage (VAC)	400VAC
Grid system	3L+N+PE
Rated frequency (HZ)	50/60Hz
power factor	0.99
PV parameters	
Photovoltaic maximum power (KW)	110KW
Photovoltaic maximum voltage (V)	650V
Photovoltaic voltage range (V)	200-650V
Photovoltaic maximum current (A)	200A
Photovoltaic input quantity	2/1
System parameters	
System size (mm)	1850*1355*2150mm
System reference weight (kg)	About 2270Kg
Waterproof level	IP54
Communication method	RS485/TCP/WIFI